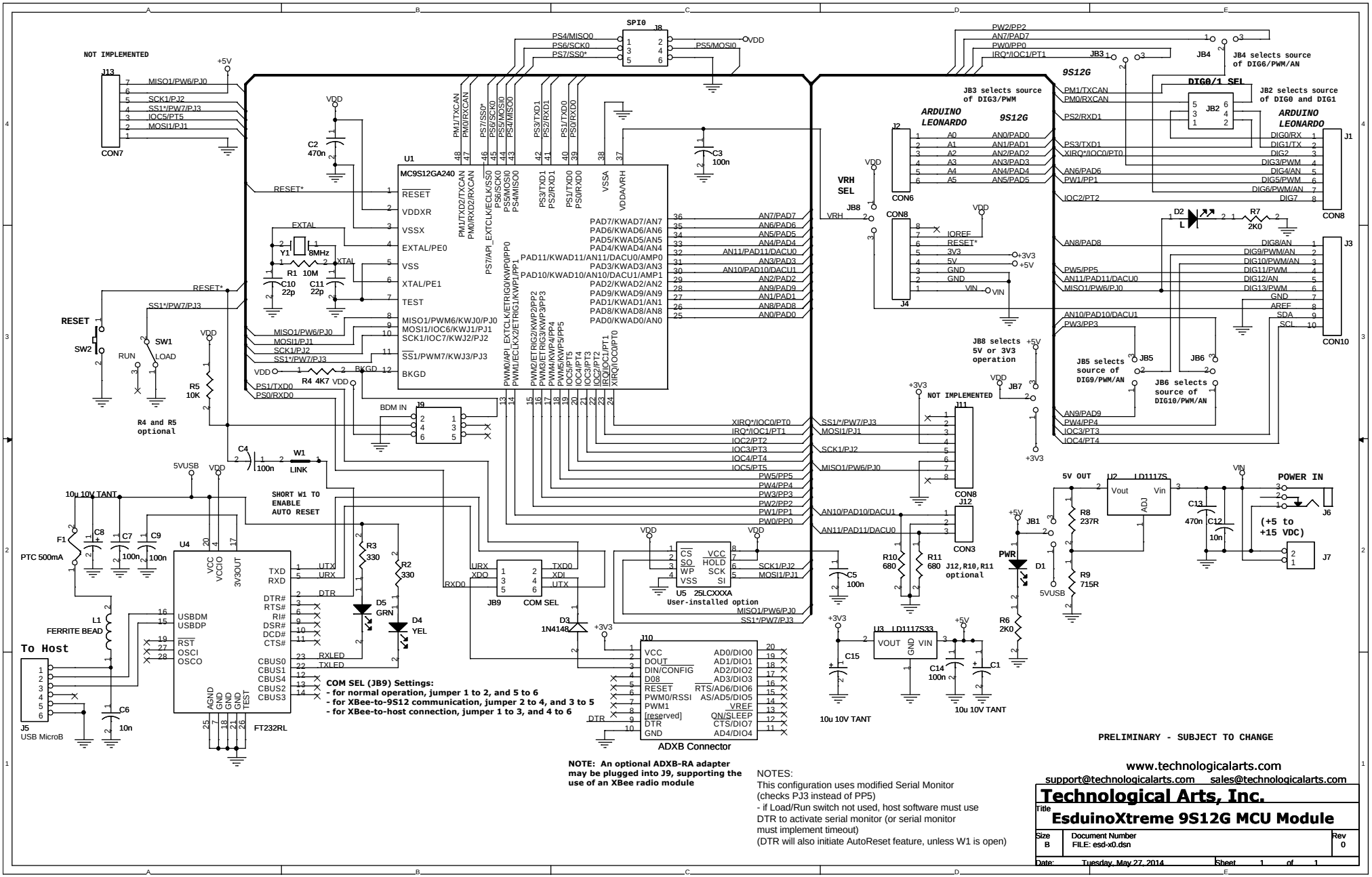

NOTES:
This configuration uses modified Serial Monitor (checks PJ3 instead of PP5)
- if Load/Run switch not used, host software must use DTR to activate serial monitor (or serial monitor must implement timeout)
(DTR will also initiate AutoReset feature, unless W1 is open)